6AD7-G

TRIODE–POWER AMPLIFIER PENTODE

Heater ■	Coated Unipotential Cathode	
Voltage	6.3	a-c or d-c volts
Current	0.85	amp.
Maximum Overall Length		4-5/8"
Maximum Seated Height		4-1/16"
Maximum Diameter		1-13/16"
Bulb		ST-14
Base		Medium Shell Octal 8-Pin
Pin 1 – Triode Grid		Pin 5 – Pentode Grid
Pin 2 – Heater		Pin 6 – Triode Plate
Pin 3 – Pentode Plate		Pin 7 – Heater
Pin 4 – Pentode Screen		Pin 8 – Cathode
Mounting Position		Any

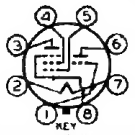

BOTTOM VIEW (8AY)

TRIODE UNIT

Plate Voltage	285 max.	volts ←
Plate Dissipation	1.0 max.	watt
Characteristics - Class A_1 Amplifier:		
Plate Voltage	250	volts
Grid Voltage	-25	volts
Amp. Factor	6	
Plate Res.	19000 approx.	ohms
Transcond.	325	μmhos
Plate Current	4	ma.

PENTODE UNIT

Plate Voltage	375 max.	volts ←
Screen Voltage	285 max.	volts ←
Plate Dissipation	8.5 max.	watts
Screen Dissipation	2.7 max.	watts
Typical Operation and Characteristics - Class A_1 Amplifier:		
Plate Voltage	250	volts
Screen Voltage	250	volts
Grid Voltage	-16.5	volts
Peak A-F Grid Voltage	16.5	volts
Zero-Sig. Plate Current	34	ma.
Max.-Sig. Plate Current	36	ma.
Zero-Sig. Screen Current	6.5	ma.
Max.-Sig. Screen Current	10.5	ma.
Plate Resistance	80000 approx.	ohms
Transconductance	2500	μmhos
Load Resistance	7000	ohms
Total Harmonic Distortion	8	%
Max.-Signal Power Output	3.2	watts

PUSH-PULL AMPLIFIER ←

Pentode Unit of 6AD7-G and a separate 6F6-G

Plate Voltage	375 max.	volts

■ In circuits where the cathode is not directly connected to the heater, the potential difference between heater and cathode should be kept as low as possible.

← Indicates a change.

RCA RADIOTRON DIVISION
RCA MANUFACTURING COMPANY, INC.

6AD7-G

6AD7-G

TRIODE–POWER AMPLIFIER PENTODE

(continued from preceding page)

Screen Voltage			285 max.	volts
Plate Dissipation			8.5 max.	watts
Screen Dissipation			2.7 max.	watts

→ *Typical Operation with Cathode Bias - Class AB_1 Amplifier:*

Values are for pentode unit of 6AD7-G and 6F6-G together

Plate Voltage	250	285	375	volts
Screen Voltage	250	285	250	volts
Cathode Resistor	560	470	470	ohms
Peak A-F Grid to Grid Volt.	59	64	55	volts
Zero-Sig. Plate Current	36	47.5	41	ma.
Max.-Sig. Plate Current	41	54.5	50	ma.
Zero-Sig. Screen Current	6.7	8.2	6.7	ma.
Max.-Sig. Screen Current	11.7	13.7	9.2	ma.
Effec. Load Resistance (plate to plate)	14000	12000	16000	ohms
Total Harmonic Dist.	4	4	2	%
Max.-Sig. Power Output	6	8.5	9	watts

For curves of the pentode unit, refer to Type 6F6.

TYPICAL PUSH-PULL CIRCUIT WITH PHASE INVERTER USING 6AD7-G AND 6F6-G

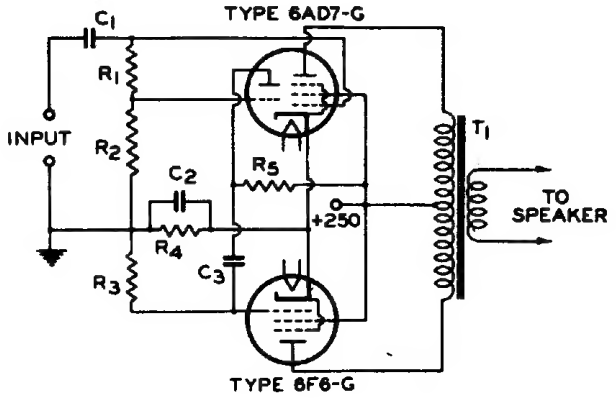

R_1 = 330000 OHMS
R_2 = 120000 OHMS
R_3 = 470000 OHMS
R_4 = 560 OHMS
R_5 = 150000 OHMS

C_1 = 0.01 µf
C_2 = 25 µf
C_3 = 0.01 µf
T_1 = OUTPUT TRANSFORMER: PLATE-TO-PLATE LOAD, 14000 OHMS

← Indicates a change.

The license extended to the purchaser of tubes appears in the License Notice accompanying them. Information contained herein is furnished without assuming any obligations.

RCA RADIOTRON DIVISION
RCA MANUFACTURING COMPANY, INC.